MULTI-HOLE ORIFICE FLOWMETER

Kang H.N. (Democratic People's Republic of Korea) Email: Kang535@scientifictext.ru

Kang Hyo Nam - Candidate in mineral processing, lecturer,
DEPARTMENT OF MINERAL PROCESSING,
CHONGJIN UNIVERSITY OF MINING AND METALLURGY ENGINEERING,
CHONGJIN, DEMOCRATIC PEOPLE'S REPUBLIC OF KOREA

Abstract: *accurately measuring the flow rate of the fluid used in the production process in various sectors of the people's economy including a metal factory has important significance for normalizing production to a high level, improving the quality of the product, and modernizing, scientific and informing the production and production process.*
In this paper, we have newly created and manufactured a new type of flow meter which overcomes various defects of the differential orifice flowmeter, and newly revealed its scientific and technological characteristics.
Keywords: *differential flowmeter, orifice flowmeter, multi-hole orifice flowmeter.*

МУЛЬТИ-ОТВЕРСТИЕ ДИАФРАГМЕННЫЙ РАСХОДОМЕР

Кан Х.Н. (Корейская Народно-Демократическая Республика)

Кан Хё Нам - кандидат наук обогащения полезных ископаемых, преподаватель,
кафедра обогащения полезных ископаемых,
Чхонджинский горно-металлургический институт,
г. Чхонджин, Корейская Народно-Демократическая Республика

Аннотация: *точное измерение расхода жидкости, используемой в процессе производства в различных секторах народного хозяйства, в том числе на металлургическом заводе, имеет важное значение для нормализации производства на высоком уровне, повышения качества продукции, модернизации, научного и информирования производства и производственного процесса.*
В этой статье говорится о том, что мы недавно создали и изготовили новый тип расходомера, который преодолевает различные дефекты расходомера с дифференциальным расходомером и вновь выявляет его научно-технические характеристики.
Ключевые слова: *дифференциальный расходомер, диафрагменный расходомер, Multi-отверстие диафрагменный расходомер.*

The differential orifice flow meter has a simple structure and is widely used as a dominant advantage such as a low value compared to other differential pressure devices.

However, currently used diaphragm flow meter has one hole at the center of the diaphragm, so that the flow stabilization section becomes long after the flow meter, and measurement accuracy is lowered.

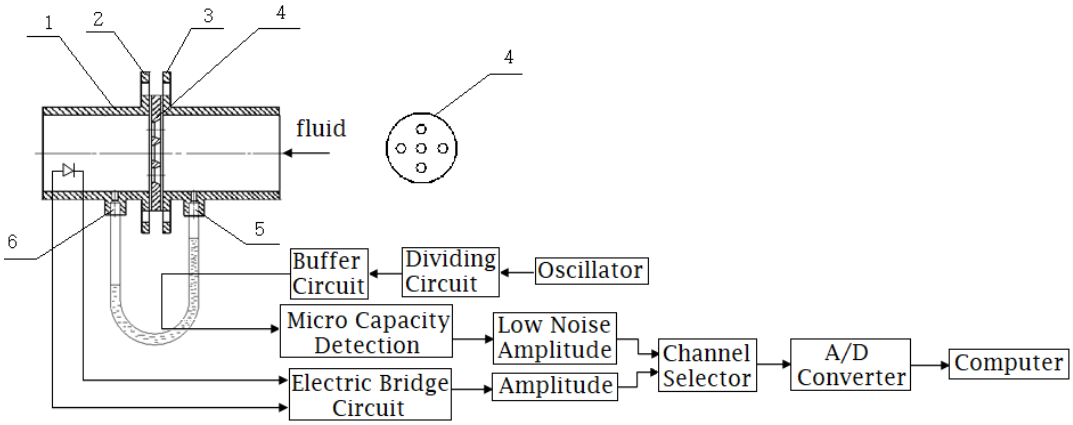

Fig. 1. Multi-hole orifice flowmeter
1- tube, 2, 3 - flange, 4 - diaphragm, 5, 6 - pressure drawing hole

In order to overcome these defects, we newly created a flow meter with several holes instead of one hole.

The newly manufacted multi - hole orifice flowmeter has higher precision than the flowmeter with one hole and the stabilization distance of the flow after the flowmeter is short.

The flow rate in the orifice flowmeter is determined as follows [1].

$$Q = \alpha \varepsilon F \cdot \sqrt{\frac{2\triangle P}{\rho}} \text{ , m}^3\text{/h} \qquad (1)$$

$$G = \alpha \varepsilon F \cdot \sqrt{2\rho \triangle P} \text{ , Kg/h} \qquad (2)$$

Where Q- Volume in working state, m^3/h

α - flux coefficient

ε - Flow Expansion Correction coefficient

F- Cross-sectional area of fluid flow m^2

$\triangle P$ – Differential pressure between before and after plate ($\triangle P = P_1 - P_2$)

ρ - Density of measuring medium at working temperature and working pressure Kg/m^3

The newly introduced multi - hole orifice flowmeter largely consisted of a flow - sensing unit, a drive circuit, a capacitive sensing unit, a micro - capacitance detection circuit, an amplifier circuit, a channel selector, an A / D converter and a computer.

The driving circuit consists of an oscillator, a divider, and a buffer amplifier (voltage repeater).

To stabilize the frequency of the oscillation signal, a crystal was used for the oscillator and a frequency (500 kHz) signal was obtained in a frequency divider.

In the buffer amplifier, a voltage repeater is used so that the influence of the internal resistance of the signal power source on the micro-capacitance detection is reduced.

Like this by introducing a new multi-hole orifice flowmeter, the measurement accuracy can be further improved and the measurement can be scientifically developed.

References

1. *Malavasi S., Messa G., Fratino U., Pagano A.* On the pressure losses through perforated plates. Flow Measurement and Instrumentation, 2012. 28: 57-66.